MADE IN BRITAIN

Diamond X COLLECTION® EXCEPTIONAL MIRRORS. FOR ELEGANT BATHROOMS.
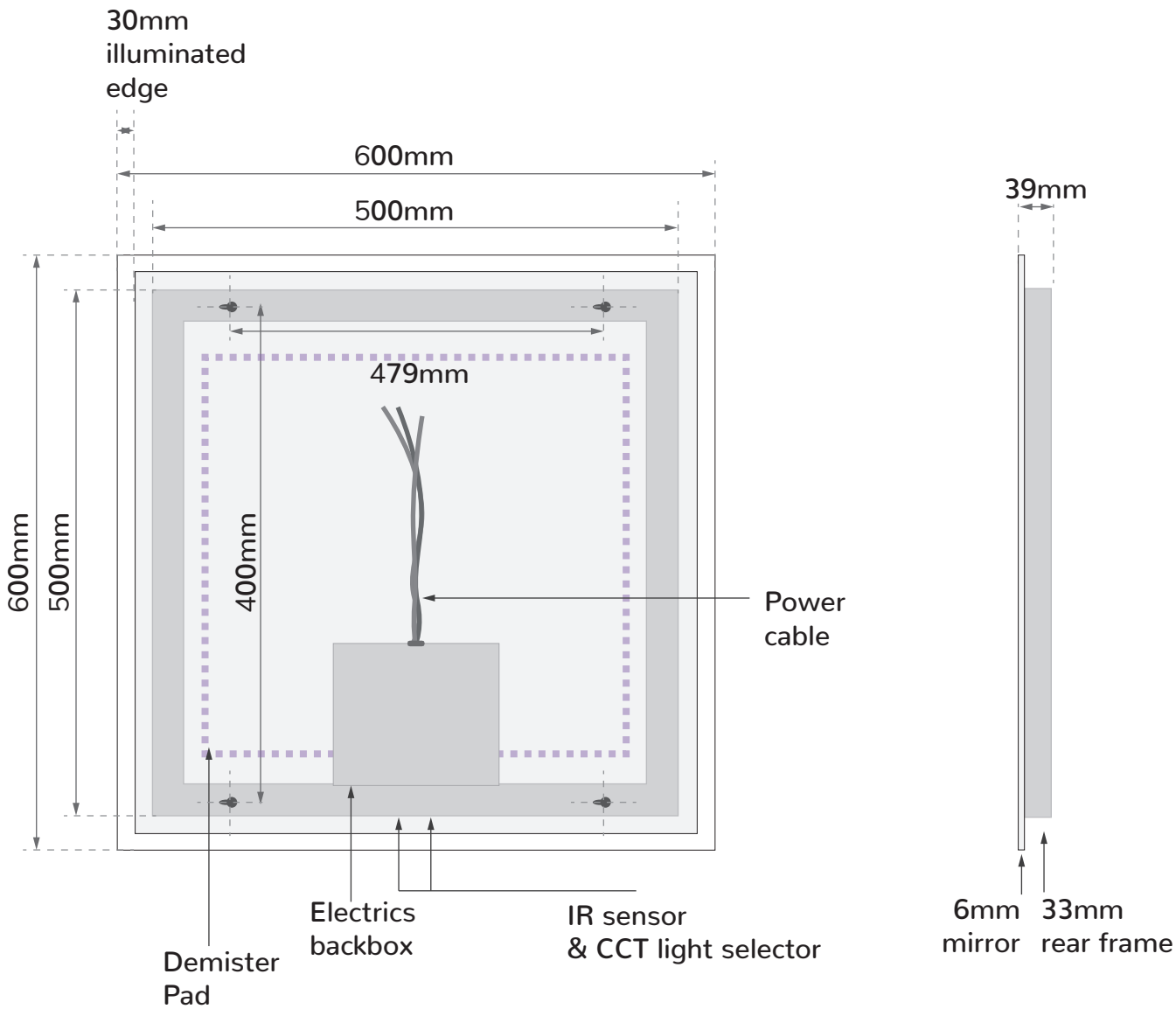
Slimline edge-lit mirror