# Wall Mounting Instructions

Mounting dimensions

- K193 (700mmx500mm)
- Key Hole Mounting Slot
- IR Sensor
- Shaver Socket

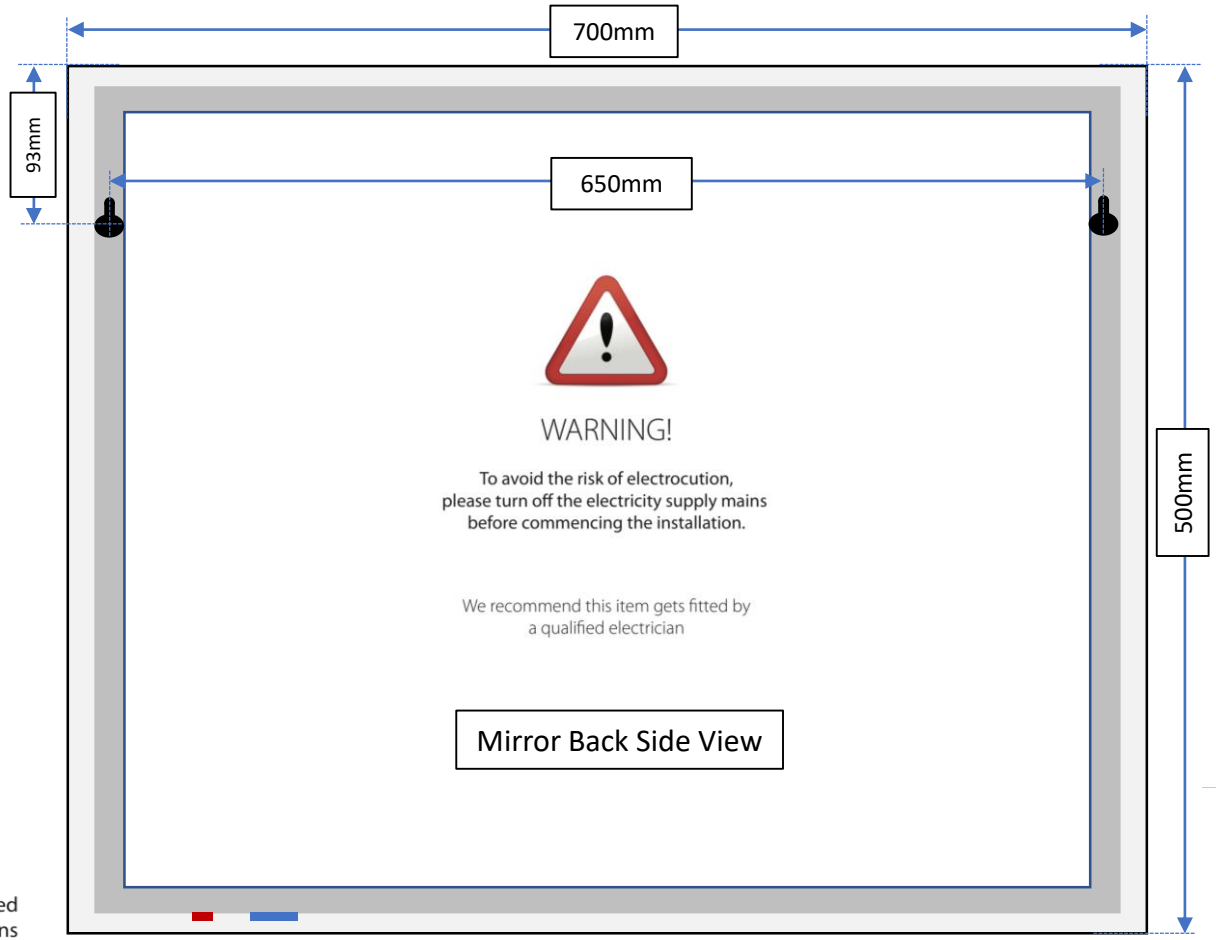


Using an appropriate drill bit for your wall, drill the mounting holes and fit the wall plugs that are supplied. The plugs supplied are suitable for brick walls only, if in doubt please consult your local DIY store for advice on alternative suitable fixings.

**1. This product is IP44 rated so can be safety fitted in Zones 2 and 3.** Position the mirror in a suitable location **with at least 15cm clearance between the proximity sensor and the nearest surface** and according to the zonal diagram show below, ensuring that the domestic electrical mains supply is within reach of the electrical entry point of the product.

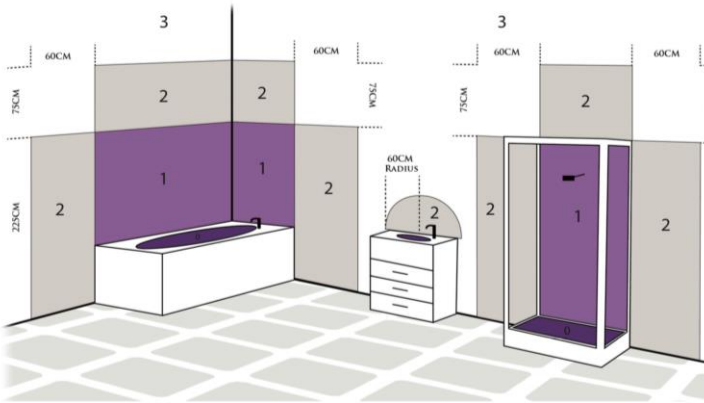


## IMPORTANT INFORMATION

This product should only be installed by a fully qualified electrician in accordance with the current IEE wiring regulations (UK) or the equivalent national wiring regulation outside of the UK. This light fitting is a **Class** I product and therefore must be earthed. Always switch off the electricity supply at the mains before and during installation of this product.

# Bathroom Mirror
# Installation & User Guide

Thank you for purchasing our illuminated mirror(s).

To avoid product damage, personal injuries, carefully read, understand, and follow all the Instructions in this installation guide before installing the product.

Save this manual for future reference.

CE RoHS IP44

**1. Isolating the sensor so the LEDs and Demister turn on and off with the bathroom lighting?**
Yes this can easily be done by a qualified electrician by bypassing the Infra-Red switch as shown below:

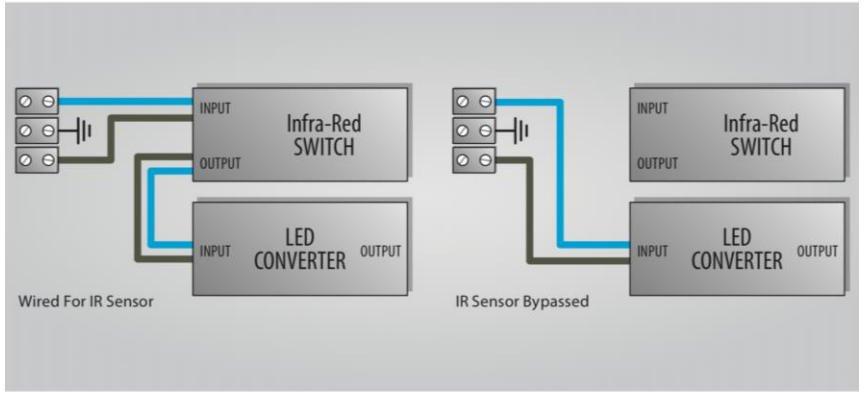


**Operating Instructions:**

**2. On/Off Infrared Sensor**
All our Mirrors include an infrared on/off Sensor located on the bottom of the frame, simply wave your hand across the sensor and it will instantly power up the lights and demister pad. Repeat the action to turn the light and demister pad off. On some mirrors fitted with Ambient under-lighting the sensor position will be on the side of the mirror frame.

**3. Shaver Socket**
Shaver Mirrors include a 240 Volt shaver socket for the use of electric shavers and toothbrushes. The shaver socket includes its own on/off rocker switch which works separately from the lights and demister pad.

**FAQs**

**1.What is a LED Mirror?**
A LED mirror uses energy saving LED light bulbs. They are waterproof rated IP44 for use in bathrooms and include smart technology like, infra-red on/off sensors, anti-mist demister pads and a shaver socket.

**2.On/Off Infra-Red Sensor?**
All our LED mirrors include infra-red on/off sensor, simply wave your hand across the sensor switch and it will instantly power up the LED lights and demister pad. You need to wave your hand 3 – 6 inches away from the sensor switch head to power up the lights on your mirror/cabinet.

**3.Where Is the Sensor Located?**
The sensor is located on the bottom right side of the mirrors frame.

**4.Can I Isolate the Sensor So the LED'S Come On With My Bathroom Lighting?**
Yes, please see Instruction no.1.

**5.How Do I Activate the Demister Pad?**
The demister pad works automatically when the lights are turned on and off.

**6.Is the Mirror Tinted Glass?**
No, the mirror is perfectly clear reflective mirror glass.

**7.Is the Mirror CE & ROHS Certified?**
Yes!

## Clock Mirrors/Cabinets

Before fitting the mirror/cabinet to the wall please ensure the clock power connection and switch connection is connected to the clock module. Gently push the power cable and clock control cable in to the clock modules connection blocks, located on the side of the clock module.

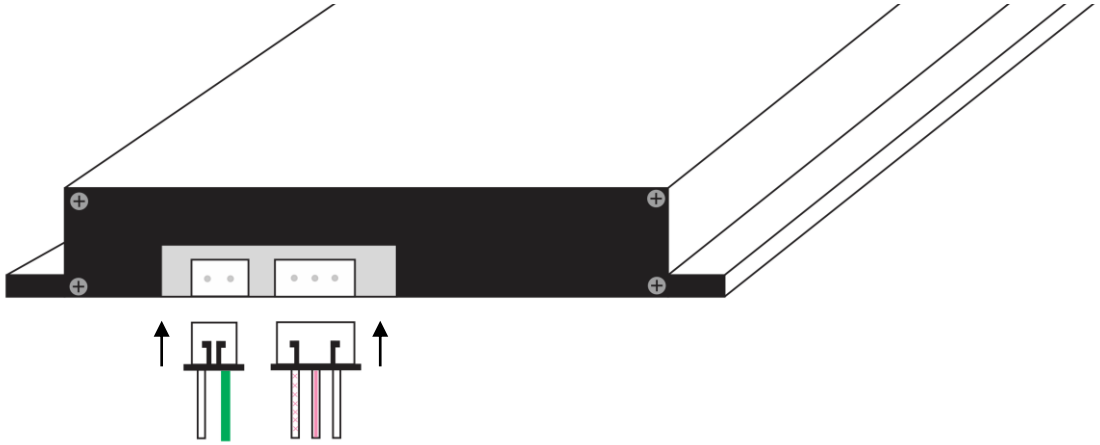

Thank you for purchasing our illuminated mirror(s).

To avoid product damage, personal injuries, carefully read, understand, and follow all the Instructions in this installation guide before installing the product.

Save this manual for future reference.

CE RoHS IP44

To set the time on the clock use the buttons located on the frame of the mirror:

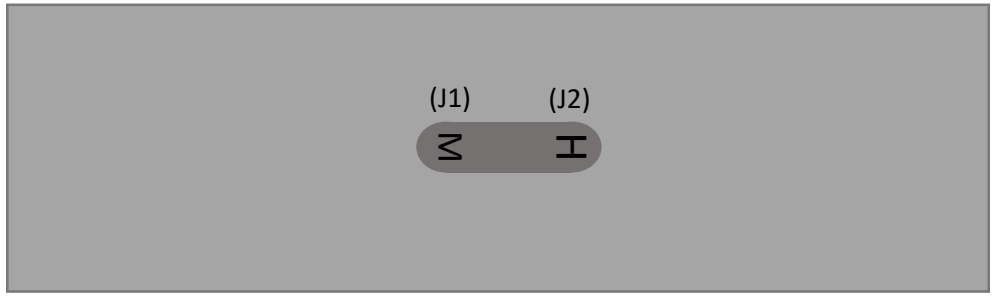


a) Press and hold the Hours button (J2) until the numbers on the clock start to flash

b) Press the Hours button (J2) until the correct hour is reached

c) Press and hold the Hours button (J2) until the numbers on the clock stop flashing

d) Repeat the above steps for minutes by using the Minutes button (J1)