Leanna Slimline Edge Mirror

Model No: 100877k470

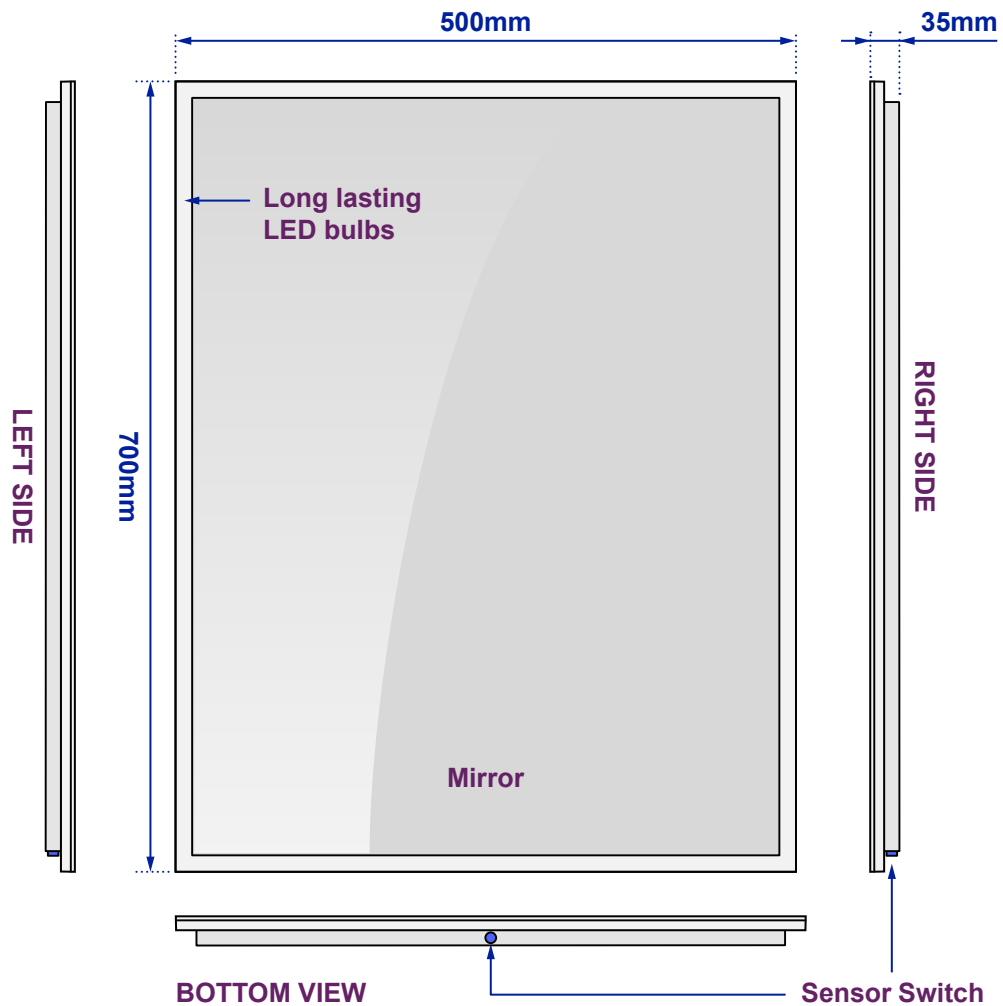

Views of complete assembly

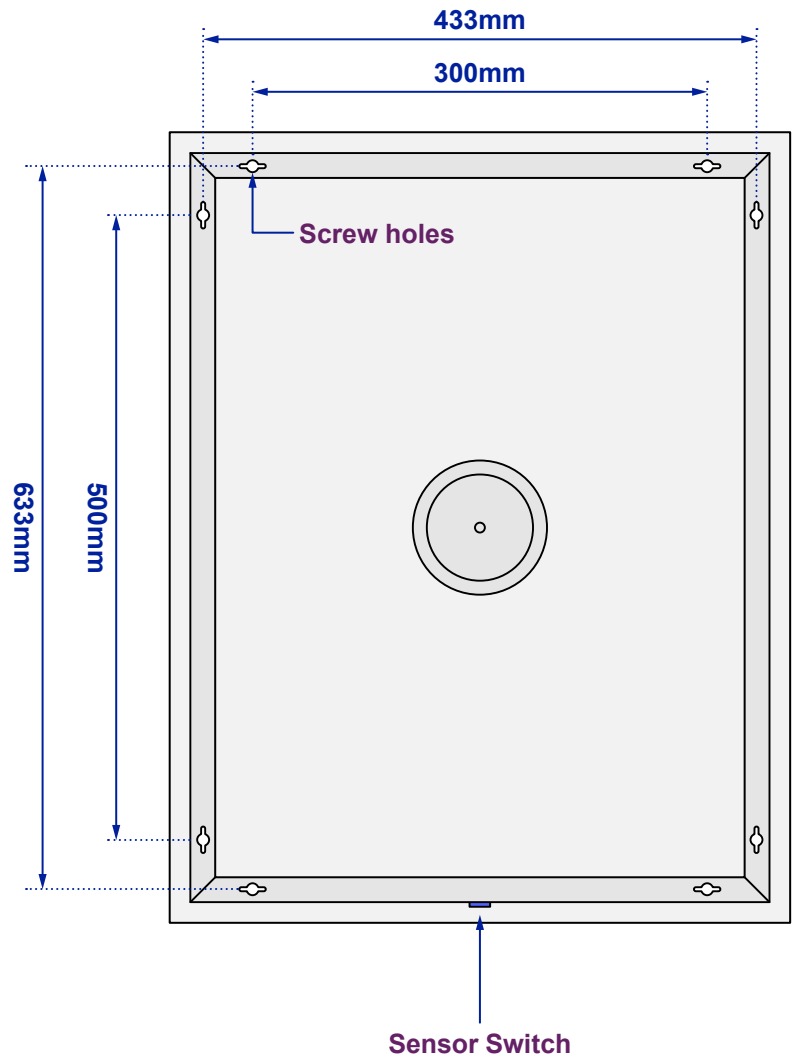

View of Back plate